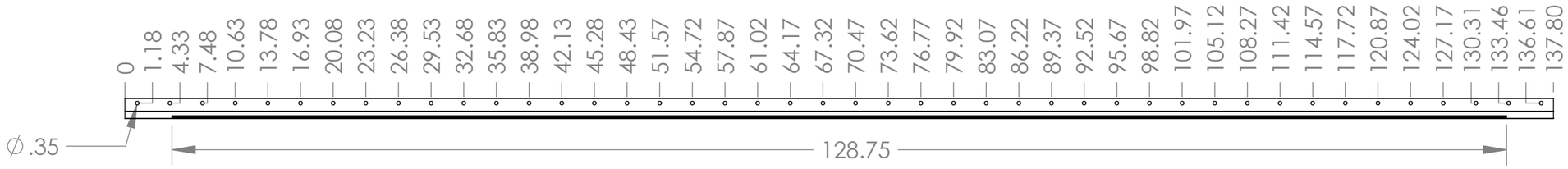

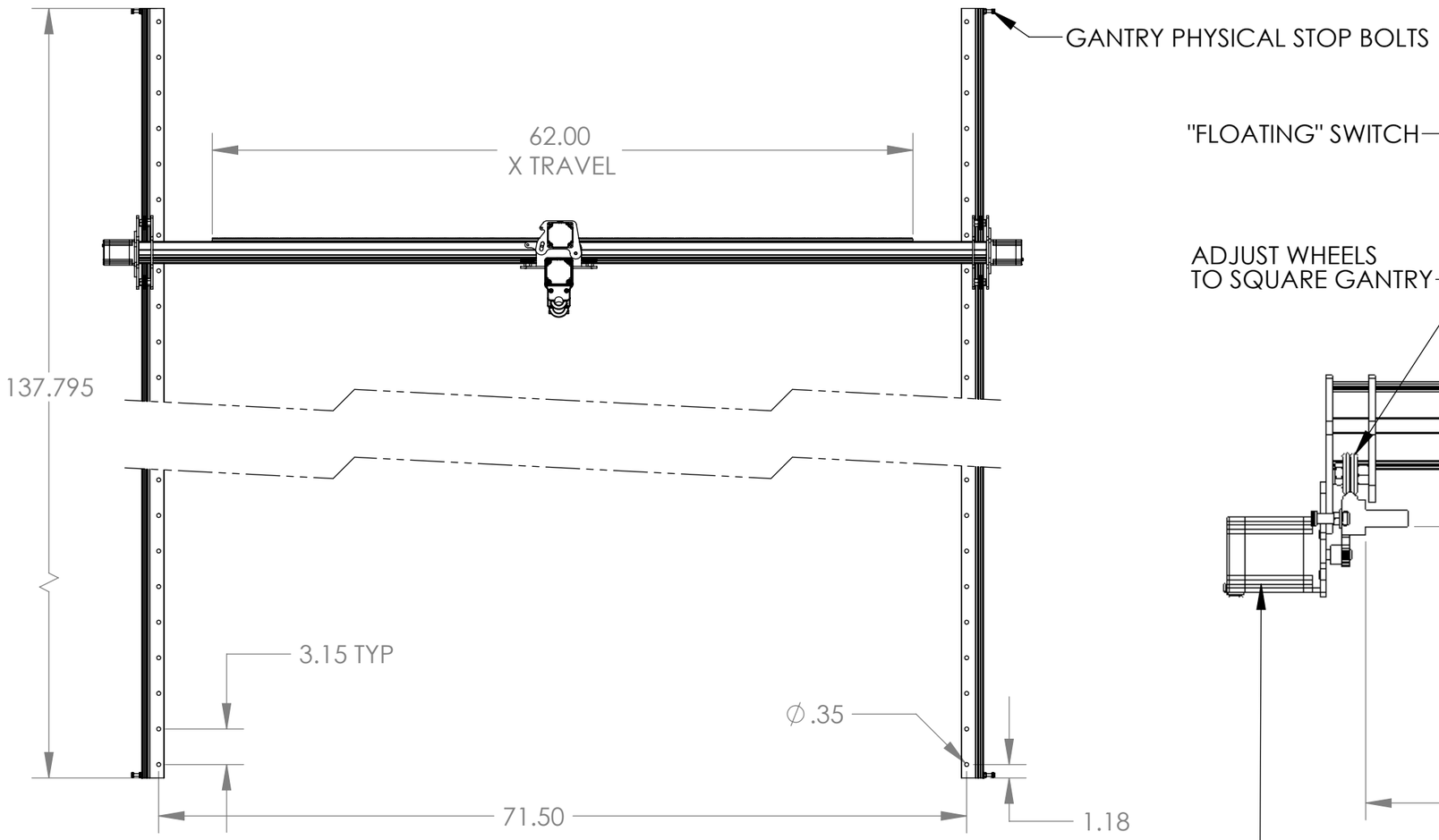

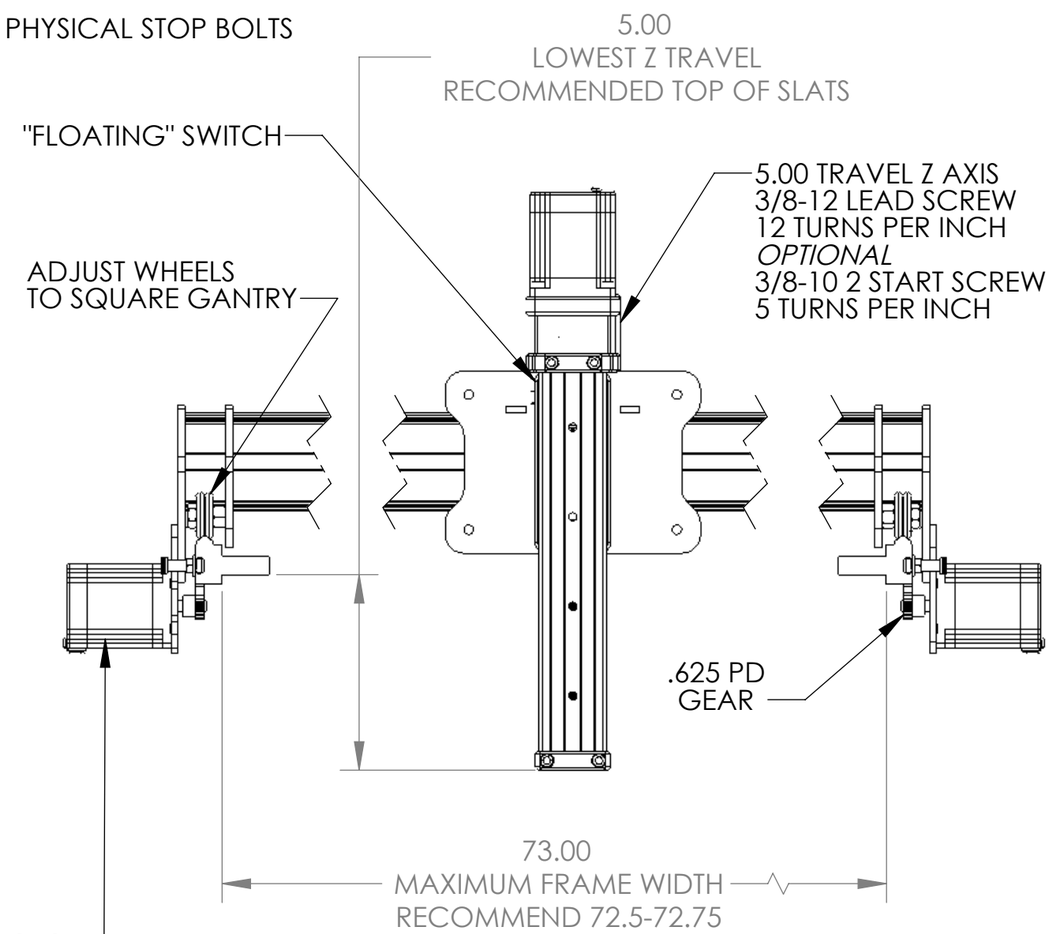

"FLOATING" TORCH SWITCH INCORPORATED INTO Z AXIS FOR "TOUCH-AND-GO" PLASMA CUTTING

NOTES:

X TRAVEL IS 62.00
Y TRAVEL IS 128.75
Z TRAVEL IS 5.00
1.00 CLAMP COLLAR FOR TORCH MOUNTING
.250 BOLTS RECOMMENDED TO MOUNT RAILS
RAILS MUST BE PARALLEL AND IN PLANE

SUGGESTED PERFORMANCE SETTINGS:

X AND Y AXIS
STEPS PER INCH 1018.59
VELOCITY 1000
ACCELERATION 50
Z AXIS
STEPS PER INCH 24000
OPTIONAL SCREW 10000
VELOCITY 50
OPTIONAL SCREW 120
ACCELERATION 50

TOLERANCES +/- UNLESS OTHERWISE SPECIFIED		MACHINING	WELDING	FABRICATING	FINISH REQUIREMENTS	USED ON REFERENCE MACHINE/DRAWING:
	DECIMAL	.03, .005	.13	.06		
	ANGLE					

THE INFORMATION CONTAINED IN THIS DRAWING IS THE SOLE PROPERTY OF PRECISION PLASMA LLC. ANY REPRODUCTION IN PART OR WHOLE WITHOUT WRITTEN PERMISSION IS PROHIBITED.

SCALE: 1:4	SIZE: B	DATE	NAME	MATERIAL:	
UNITS: INCHES	DRAWN	3/17/10	RWC		
SOLIDS (Y/N): Y	CHECKED				

PRECISION PLASMA LLC.	TITLE: 5 X 10 GANTRY KIT	DRAWING NUMBER: **5 x 10**	REV. SHEET 1 OF 1